R48DB Series

STANDARD POWER ROLLER (Built-in DC Brushless Motor With Brake)

R48-DB-060

Dimension :

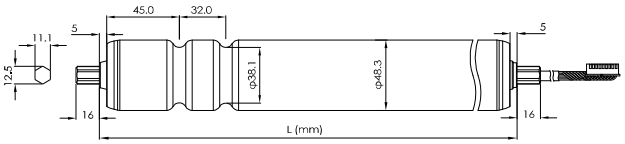

Outer Diameter: ϕ48.3mm
Power: 24VDC
Tube thickness: 1.7mm
Tube material: STKM12

Specification :

Velocity (m/min)		Tangential Force (N)		Torque (N.m)		Input Current (A)			Rated Output (W)	Tube Length (L)	
No Load	Rated	Rated	Starting	Rated	Starting	No Load	Rated	Starting		mm	inch
60	60	20.7	82.8	0.5	2.0	0.6	1.8	4.0	20	390~2000	15.4~78.7

1N ≒ 0.1kg 1N.m ≒ 10kgf.cm

1. Above results were tested with WWL control card.
2. Variable speed : 33~100% (setting by WWL control card)
3. Ambient temperature : 0~40℃
4. Relative humidity : 90% RH max. (non-condensing)

※ Customized specifications are welcome, please contact us for details.
※ Specifications are subject to change without prior notice.

ROLLER FIXTURES

Parts No: FAFH1F1-001 FAFH1F1-003
FAFH1F1-002 FAFH1F1-004

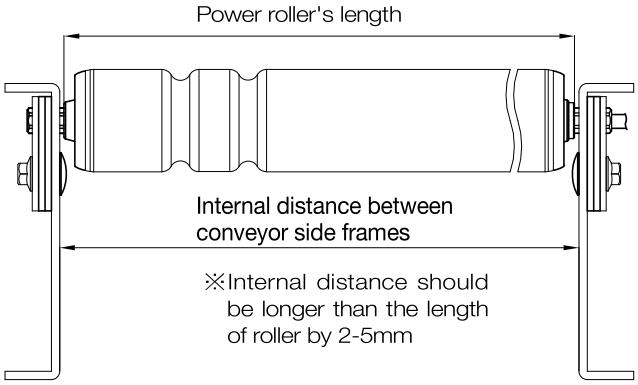

Assembly Diagram:

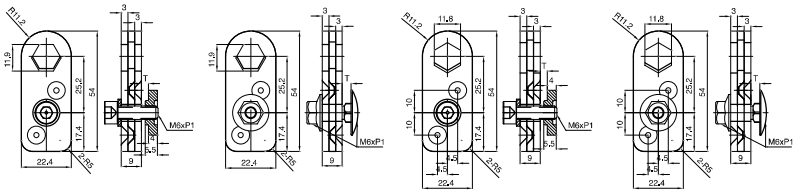

FAFH1F1-001 FAFH1F1-002 FAFH1F1-003 FAFH1F1-004

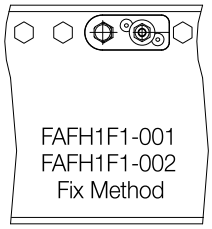

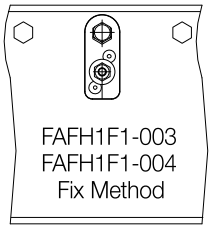

NOTE : Customized specifications are welcome, please contact us for details.